Product Data Sheet

GRP Solid Top Grating

Our GRP Solid Top Grating is a specially designed moulded non-slip composite floor grating, constructed from glass reinforced fibreglass making it lightweight, chemical, rust, and corrosion resistant whilst also offering longevity and durability.

Effectively a standard mesh panel with an anti-slip flooring plate bonded to one side, the solid surface allows smoother movement of wheeled traffic and prevents objects falling through to the level below.

Available in 41mm and 54mm thicknesses. We can also cut to any size using our in-house cutting service.

Optional fixing discs are available to purchase if required.

Features

- **Typical applications**: Suitable for service riser decks, maintenance platforms, and access walkways, when designed in accordance with BS EN ISO 14122:2016, along with pontoons, flooring, ramps, and covers across industrial, construction, chemical, marine, and offshore environments.
- **Material**: GRP - Glass reinforced polyester with a resin coated gritted surface.
- **Cleaning**: Use of a stiff brush will normally be sufficient to remove everyday dirt and debris, and for more stubborn dirt a mild detergent with warm water is often effective. A pressure washer on a low pressure setting can be used to clean the GRP.
- **Sustainability:**: REACH compliant.







For more information about this product or, to request a quote **click here**

Code	Size	Thickness	Weight	Colour	RAL
GRS4812-41GY	3660mm x 1220mm	41mm	90kg	Grey	7047, 7000, 7043
GRS4812-41GN	3660mm x 1220mm	41mm	90kg	Green	6010
GRS4812-54GY	3660mm x 1220mm	54mm	130kg	Grey	7047, 7000, 7043
GRS4812-54GN	3660mm x 1220mm	54mm	130kg	Green	6010
FD45SS	Fixing Disc 45mm		0.1kg	Stainless Steel	

Please note, cutting tolerance +/- 5mm

Get in touch
+44 (0) 1779 841 899
sales@bluediamond.uk.com
www.bluediamond.uk.com

bluediamond

GRP Solid Top Grating

Technical Specification	
Slip resistant:	Excellent slip resistance to level 3
Wear resistant:	Excellent wear resistance to level 3, suitable for heavy footfall
Chemical resistant:	Yes
Cut to size:	Yes, tolerance +/- 3mm
Disability friendly:	Yes, the low profile makes it suitable for wheelchair users
Dry area:	Yes
Wet area:	Yes
Oily and greasy area:	Yes
Heavy area:	Yes
Wheeled area:	Yes
Environment:	Suitable for indoor and outdoor use
Flame retardant:	Yes
Impact resistant:	Yes
Non-conductive (Electrical):	Yes
Non-conductive (HV Electrical):	Yes
Product testing:	◆ Slip resistance ◆◆ Tested to BS 7976.2 - PTV 'Extremely Low' for wet and dry conditions, PTV 'Low' for oily and greasy conditions ◆◆ Coefficient of Friction (CoF): Dry 72; Wet 68 and Oil 63 ◆ Fire classification ◆◆ EN 13501-1: Class B-s1, d0 ◆◆ ASTM E84-2018 Class 1 ◆ Load standard ◆◆ BS EN ISO 14122:2016 ◆ UV certificate ◆◆ UV Weather ISO 4892-2 Xenan Arc 5000hrs
Temperature resistance:	-50°C to +110°C
UV Resistant:	Yes
Sustainability:	REACH (Registration, Evaluation, Authorisation and Restrictions of Chemicals)

bluediamond

GRP Solid Top Grating

Pendulum Slip Testing

The pendulum slip testing was carried out on 17.02.23 and concluded that our GRP Grating achieved the highest slip resistant classification of 'Extremely Low' pedestrian slip risk for wet and dry conditions and 'Low' for oily/greasy areas.

Pendulum Test Value (PTV)	Slip Risk
0 - 24	High
25 - 35	Moderate
36 - 64	Low
65+	Extremely Low

Pendulum test results	Coefficient of Friction (CoF)		
	Dry	Wet	Oil
Standard Grit	72	68	63

GRP Care and Maintenance

- **Cleaning**

  Being a highly durable material, using a stiff brush will normally be sufficient to remove everyday dirt and debris, and for more stubborn dirt, wash with warm water and a mild detergent. A pressure washer on a low-pressure setting can also be used, however, care should be taken to ensure that this does not harm the integrity of the fixings being used, likely to be screws and/or adhesive.

  We recommend always testing any cleaning method and liquids on a small inconspicuous section before applying to the full area. Any spills should be cleaned immediately in line with the product data sheets and the company's own safety procedures.

- **General Routine Maintenance**

  The integrity of all fixings should be checked on a regular basis to ensure that the grating remain in a firm and stable position. The gritted surfaces and GRP substrate should also be checked regularly, the frequency would depend on the nature and volume of footfall. As a guide, for high traffic areas a monthly inspection would be advisable.

- **Life expectancy**

  Our GRP Grating have a design life of 10+ years, however, the life expectancy of any flooring product will be dictated by the nature and volume of the traffic it receives. Factors such as footwear type and material, weight of individual, pedestrian or non-pedestrian traffic, and any contamination such as dirt or grit are all factors that will influence the life term through natural wear and tear of the GRP.

bluediamond

GRP Solid Top Grating

Installation

- **Handling**

  Safe handling practices should always be employed. GRP should also be stored face down to prevent damage.

- **Cutting**

  Minor adjustments, small cut outs, can be made with a hacksaw or a jigsaw with a suitable blade. We offer a full in-house cutting service, however, should you wish to cut the grating yourself, this is easily to do by using orbital cutting equipment with either a stone or diamond blade. Cutting should be carried out externally, or where there is dust extraction, or suitable ventilation. Appropriate protective equipment should always be worn.

We're here to help

Should you have any questions about our GRP Grating, or need advice regarding care, maintenance or installation, we're only a phone call away.

bluediamond

GRP Solid Top Grating

Safe Load and Deflection Charts (mm) – Uniform and Concentrated Line Loads

Mesh Size	Load Bar Size	Span (mm)	Type of Load	Uniform load – ΔU (kN/m²) – Deflection (mm) Concentrated line load – ΔC (kN/m) – Deflection (mm)													
				3	5	8	10	15	20	25	30	40	50	60	80	90	100
38x38	38x6	200	ΔU	0.08	0.13	0.20	0.26	0.38	0.51	0.64	0.77	1.02	1.28	1.54	2.05	2.31	2.56
			ΔC	0.16	0.27	0.43	0.53	0.80	1.07	1.33	1.60	2.13	2.66	3.20	4.26	4.80	5.33
		400	ΔU	0.12	0.20	0.31	0.39	0.59	0.79	0.98	1.18	1.57	1.96	2.36	3.14	3.53	3.93
			ΔC	0.45	0.75	1.21	1.51	2.26	3.02	3.77	4.52	6.03	7.54	9.05	12.07	13.57	15.08
		600	ΔU	0.42	0.70	1.13	1.41	2.11	2.82	3.52	4.23	5.63	7.04	8.45	11.27	12.68	14.09
			ΔC	1.23	2.04	3.27	4.09	6.13	8.17	10.21	12.26	16.34					
		800	ΔU	1.39	2.32	3.71	4.64	6.96	9.28	11.60	13.92	18.56					
			ΔC	2.83	4.71	7.54	9.42	14.14	18.85								
		1000	ΔU	3.53	5.88	9.41	11.76	17.64									
			ΔC	5.61	9.34	14.95	18.68										
		1200	ΔU	7.43	12.38	19.81											
			ΔC	9.91	16.51												

Mesh Size	Load Bar Size	Span (mm)	Type of Load	Uniform load – ΔU (kN/m²) – Deflection (mm) Concentrated line load – ΔC (kN/m) – Deflection (mm)													
				3	5	8	10	15	20	25	30	40	50	60	80	90	100
50x50	50x6	200	ΔU	0.04	0.07	0.12	0.15	0.22	0.30	0.37	0.45	0.60	0.75	0.90	1.20	1.35	1.50
			ΔC	0.09	0.16	0.25	0.31	0.47	0.62	0.78	0.94	1.25	1.56	1.87	2.50	2.81	3.12
		400	ΔU	0.07	0.11	0.18	0.23	0.34	0.46	0.57	0.69	0.92	1.15	1.38	1.84	2.07	2.30
			ΔC	0.26	0.44	0.71	0.88	1.32	1.77	2.21	2.65	3.53	4.41	5.30	7.06	7.95	8.83
		600	ΔU	0.25	0.41	0.66	0.82	1.24	1.65	2.06	2.47	3.30	4.12	4.95	6.60	7.42	8.25
			ΔC	0.72	1.20	1.91	2.39	3.59	4.78	5.98	7.17	9.57	11.96	14.35	19.13	21.52	23.91
		800	ΔU	0.81	1.36	2.17	2.72	4.07	5.43	6.79	8.15	10.86	13.58	16.29	21.73	24.44	
			ΔC	3.28	5.47	8.75	10.94	16.40	21.87								
		1000	ΔU	2.06	3.44	5.51	6.88	10.32	13.76	17.20	20.64						
			ΔC	3.28	5.47	8.75	10.94	16.40	21.87								
		1200	ΔU	4.35	7.25	11.60	14.50	21.75									
			ΔC	5.80	9.66	15.46	19.33										

bluediamond

GRP Solid Top Grating

GRP Grating Accessories

Fixing Disc 45mm



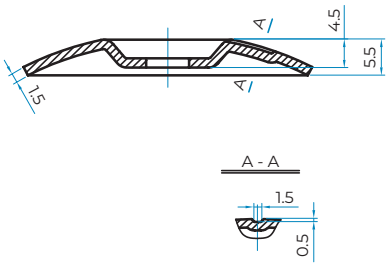

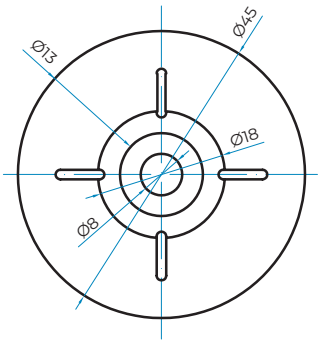

Installation Diagram

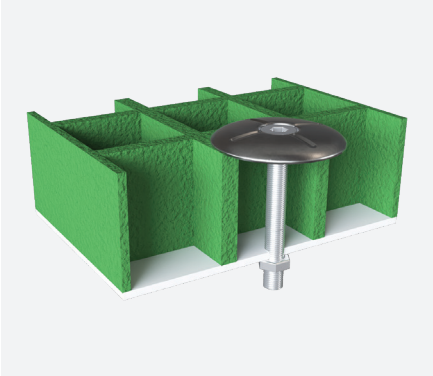

Fixing Disc

bluediamond

GRP Solid Top Grating

GRP Chemical Resistance Chart

Environment	%Conc.	Max.Oper. Temp.F/C.
Acetic Acid	50	125/52
Aluminum Hydroxide	100	160/71
Ammonium Chloride	ALL	170/77
Ammonium Bicarbonate	15	125/52
Ammonium Hydroxide	28	N/R
Ammonium Sulphate	ALL	170/77
Benzene	ALL	N/R
Benzoic Acid	SAT	150/66
Borax	SAT	170/77
Calcium Carbonate	ALL	170/77
Calcium Nitrate	ALL	180/82
Carbon Tetrachloride	100	N/R
Chlorine Dry Gas	-	140/60
Chlorine Water	SAT	80/27
Chromic Acid	5	70/21
Citric Acid	ALL	170/77
Copper Chloride	ALL	170/77
Copper Cyanide	ALL	170/77
Copper Nitrate	ALL	170/77
Ethanol	50	75/24
Ethylene Glycol	100	90/32
Ferrous Chloride	ALL	170/77
Formaldehyde	50	75/24
Glucose	100	170/77
Gasoline	100	80/27
Glycerine	100	150/66
Hydrobromic Acid	50	120/49
Hydrochloric Acid	37	75/24
Hydrogen Peroxide	5	100/38
Lactic Acid	ALL	170/77

Environment	%Conc.	Max.Oper. Temp.F/C.
Lithium Chloride	SAT	150/66
Magnesium Chloride	ALL	170/77
Magnesium Nitrate	ALL	140/60
Magnesium Sulphate	ALL	170/77
Mercuric Chloride	100	150/66
Mercurous Chloride	ALL	140/60
Nickel Chloride	ALL	170/77
Nickel Sulphate	ALL	170/77
Nitric Acid	20	70/21
Oxalic Acid	ALL	75/24
Perchloric Acid	10	N/R
Phosphoric Acid	100	120/49
Potassium Chloride	ALL	170/77
Potassium Dichromate	ALL	170/77
Potassium Sulphate	ALL	170/77
Propylene Glycol	ALL	170/77
Sodium Acetate	ALL	160/71
Sodium Bisulphate	ALL	170/77
Sodium Bromide	ALL	170/77
Sodium Cyanide	ALL	170/77
Sodium Hydroxide	N/R	N/R
Sodium Nitrate	ALL	170/77
Sodium Sulphate	ALL	170/77
Stannic Chloride	ALL	160/71
Sulfuric Acid	25	75/24
Tartaric Acid	ALL	170/77
Vinegar	100	170/77
Water Distilled	100	170/77
Zinc Nitrate	ALL	170/77
Zinc Sulphate	ALL	170/77